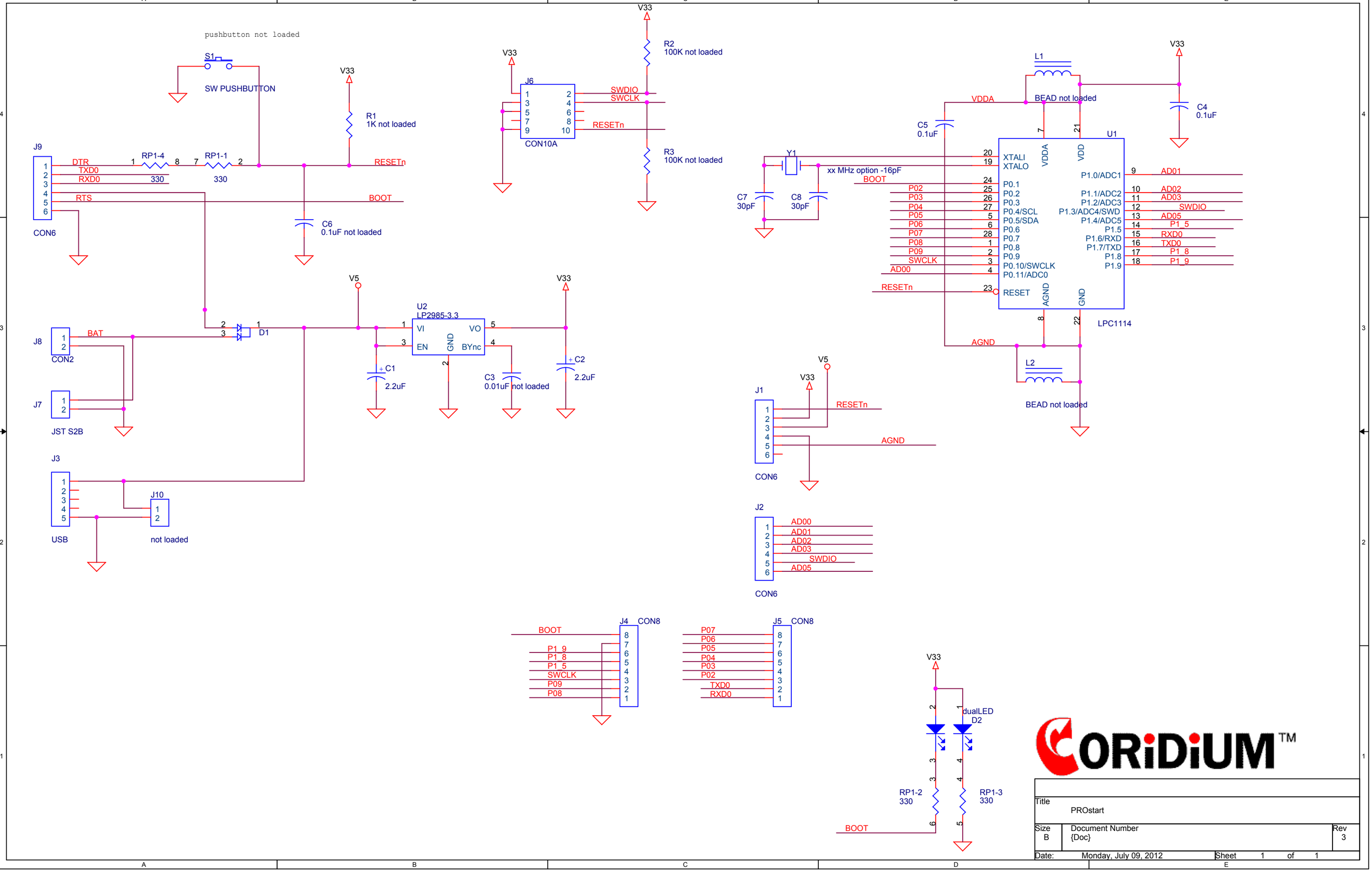
pushbutton not loaded
S1
SW PUSHBUTTON
V33
R1
1K not loaded
J9
CON6
DTR
TXD0
RXD0
RTS
RP1-4
330
RP1-1
330
RESETn
BOOT
C6
0.1uF not loaded
J6
CON10A
SWDIO
SWCLK
RESETn
R2
100K not loaded
R3
100K not loaded
L1
BEAD not loaded
C4
0.1uF
C5
0.1uF
VDDA
Y1
xx MHz option -16pF
C7
30pF
C8
30pF
U1
LPC1114
XTALI
XTALO
P0.1
P0.2
P0.3
P0.4/SCL
P0.5/SDA
P0.6
P0.7
P0.8
P0.9
P0.10/SWCLK
P0.11/ADC0
RESET
P1.0/ADC1
P1.1/ADC2
P1.2/ADC3
P1.3/ADC4/SWD
P1.4/ADC5
P1.5
P1.6/RXD
P1.7/TXD
P1.8
P1.9
AD01
AD02
AD03
SWDIO
AD05
P1_5
RXD0
TXD0
P1_8
P1_9
AGND
L2
BEAD not loaded
V5
U2
LP2985-3.3
VI
VO
EN
BYnc
GND
C1
2.2uF
C3
0.01uF not loaded
C2
2.2uF
J8
CON2
BAT
D1
J7
JST S2B
J3
USB
J10
not loaded
J1
CON6
J2
CON6
AD00
AD01
AD02
AD03
SWDIO
AD05
J4
CON8
BOOT
P1_9
P1_8
P1_5
SWCLK
P09
P08
J5
CON8
P07
P06
P05
P04
P03
P02
TXD0
RXD0
dualLED
D2
RP1-2
330
RP1-3
330
CORIDIUM™
Title
PROstart
Size
B
Document Number
{Doc}
Rev
3
Date:
Monday, July 09, 2012
Sheet
1
of
1